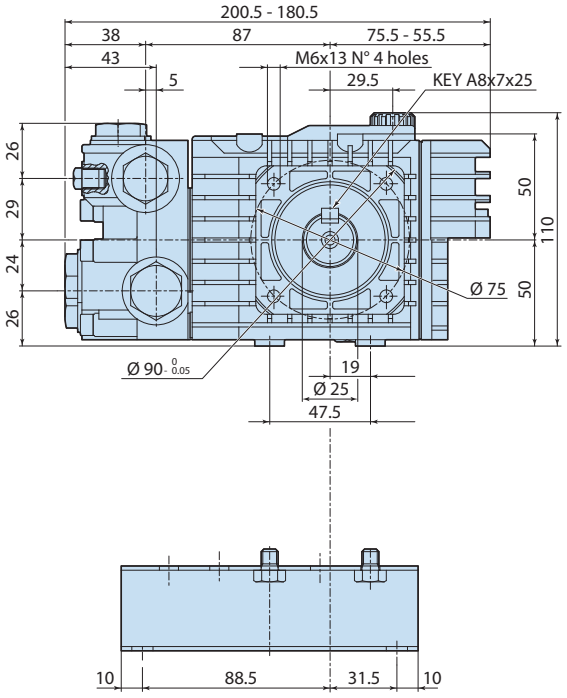
200.5 - 180.5
38
87
75.5 - 55.5
43
5
M6x13 N° 4 holes
29.5
KEY A8x7x25
26
29
24
26
50
110
50
Ø 75
Ø 90 0 -0.05
19
Ø 25
47.5
10
88.5
31.5
10

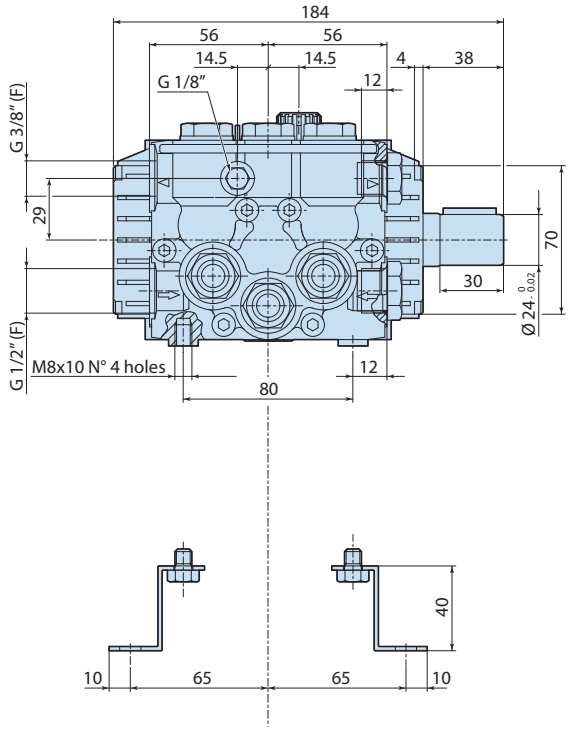
184
56
56
14.5
14.5
4
38
G 1/8"
12
G 3/8" (F)
29
70
30
Ø 24 0 -0.02
G 1/2" (F)
M8x10 N° 4 holes
12
80
40
10
65
65
10

1328515